865

Incremental double Heavy Duty hollow shaft encoder

- **Extremely robust housing for harsh environments**
- **Shock and vibration protected**
- **IP 65, encapsulation class**
- **Two galvanically separated encoders in one housing**
- **Short-circuit protected outputs**

ELECTRICAL SPECIFICATION

Supply voltage +EV	9-30V	5V ±10%
	Polarity protected	---
Current consumption at no load	65mA @ 24V Max 80mA	85mA Max 155mA
Line counts Acrylic glass Glass	 150…5000 2x 500, 1000, 1024, 2048, 4096, 6350 Other pulserates, contact Leine & Linde	
Measuring steps	4 x line counts	
Accuracy Dividing error Channel separation	 ± 50° el 90° ± 25° el	
Outputs	HTL	RS-422
	Short circuit protected	
Load max	± 40mA	± 20mA
Max cable length	200m @ 50kHz	1km (TIA/EIA-422-B)
U_{high} (at 10mA load) U_{low} (at 10mA load)	> +EV - 4,0V < 2,5V	> 3,0V < 1,15V
Frequency range	0…100kHz	0…200kHz

ACCESSORIES

Torque arm M5 M6	 Part. No. 01208013 Part. No. 01208014

OUTPUT CIRCUIT

Output A: High current HTL

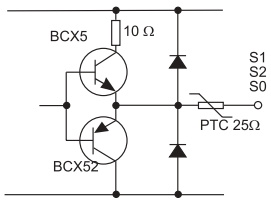

Output A, B: Linedriver

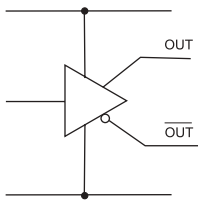

OUTPUT SIGNALS

High current HTL:

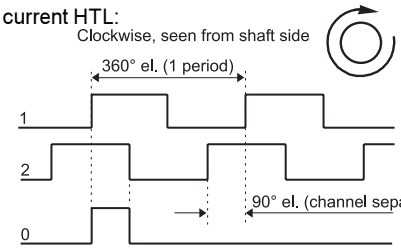

Line Driver:

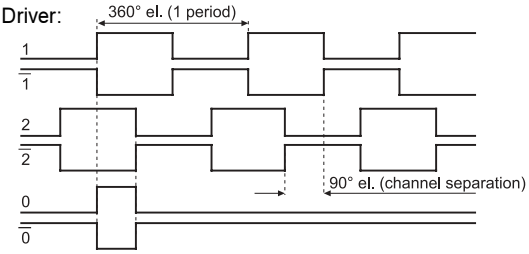

CONNECTION

Function	Colour	Terminal
1	Green	See drawing or label
1	White	
2	Black	
2	Yellow	
+ E Volt	Red	
0 Volt	Blue	
0	Brown	
0	Violet	
Case	Shield	

Leine & Linde

CE

865

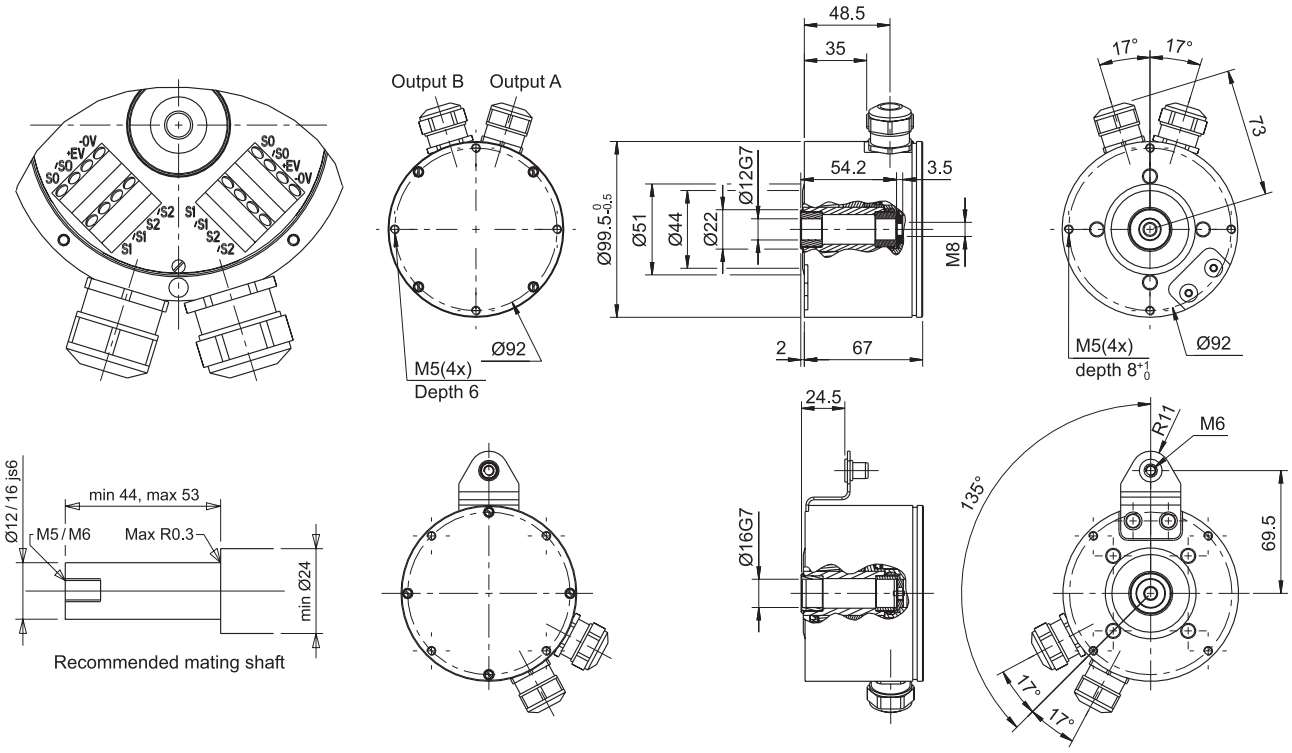

MECHANICAL SPECIFICATION

Isolated Hollow-shaft	Ø12, 16mm, Stainless steel / PEEK	
Moment of inertia	55 x 10^{-6} kgm²	
Load max		
Radial	300N	
Axial	100N	
Speed max	4000 rpm	
Code disc	Standard	Extended temp
Temperature		
Operating	-25°C ... +70°C	-20°C ... +80°C
Storage	-25°C ... +70°C	-25°C ... +80°C
Housing	Aluminum, anodized	
Weight	Approx. 1300g	
Protection class	IP 65 according to IEC 529	
Vibration	<100m/s² (50…2000 Hz)	
Shock	<1000m/s² (11ms)	
Cable	10x0,25mm² twisted pair PVC	

ORDERING INFORMATION

8 6 5 - [ ][ ][ ][ ][ ][ ] - [ ][ ][ ][ ] [ ][ ][ ][ ]

Encoder A Encoder B

Option
Mechanical
0 = Standard
1 = Torque bracket

Electrical (A / B)
0 = 2 x 9-30V *
1 = 9-30V / 5V *
2 = 2 x 9-30V **

Hollow-shaft
7 = Ø 12 mm
8 = Ø 16 mm

Connection
4 = 2 x M20 cable gland, radial Ø8-11mm
5 = 2 x M20 cable gland, radial Ø11-14mm
3 = Cable, radial 1.5 m
9 = Cable, radial xx m

Supply voltage
9 = See options

Internal use
1 = Standard 150…2500 ppr
2 = Standard 2500…5000ppr
4 = Extended temp 2 x 500, 1000, 1024, 2048, 4096, 6350ppr
Other pulserates, contact Leine & Linde for info.

Line counts

* Encoder A with 3 channel High current HTL output, encoder B with 6 channel linedriver output. Only available with cable output.

** Encoder A and B with linedriver output.

Leine & Linde *ISO 9001 certified*

Leine & Linde AB, Box 8, SE-645 21 Strängnäs, Sweden. Olivehällsvägen 8.
Phone: +46 (0)152 265 00. Fax: +46 (0)152 265 05. E-mail: info@leinelinde.se

02-04-09 PS. Specifications can be changed without prior notice.